CORDLESS

ONEPWR™
BATTERY SYSTEM

USER GUIDE

EMERGE
CORDLESS VACUUM
F180PSV22Z

EMERGE+
CORDLESS VACUUM
F180PSV23H

EMERGE PET
CORDLESS VACUUM
F180PSV22J2

EMERGE PET+
CORDLESS VACUUM
F180PSV23I

EMERGE COMPLETE
CORDLESS VACUUM
F180PSV22A2

IMPORTANT SAFETY INFORMATION

This machine is intended for household use only and NOT for commercial or industrial use. This machine is intended for dry vacuuming only. Do not use this machine for any other purpose. PLEASE KEEP INSTRUCTIONS FOR FURTHER USE AND USE ONLY AS INSTRUCTED IN THIS GUIDE.

- Don't leave the charger plugged in when unattended.
- Don't use the machine if it is faulty or has been dropped, damaged or left outdoors.
- Don't use the machine to pick up any flammable or combustible materials (lighter fluid, petrol, kerosene etc.) or use the machine in an area with explosive vapours or liquid.
- Don't use the machine to pick up hot coals, cigarette butts, matches or smoking hot burning items or use in an area where there may be harmful fluids (chlorine, bleach and ammonia drain cleaner).
- Don't handle the charger, battery or use the machine with wet hands.
- Don't unplug the charger by pulling on the power cord.
- Don't use the charger if the power cord or plug is damaged.
- Don't attempt to remove blockages with sharp objects as this may cause damage to the machine.
- Don't use the machine with the incorrect battery or charger as this may result in damage or injury to the user. The correct battery charger information is listed on the battery pack ratings label.
- Don't charge the battery outdoors, or leave the charger connected to the mains when not in use.
- Don't use the machine with a damaged battery. If the battery is damaged return the machine, battery and charger to the point of purchase.
- Don't over fill the dirt container to avoid blocking the air flow through the machine.
- The brushbar in the powered head constantly rotates when switched on. Never use the powered head on one spot for an extended period of time as the brushbar may damage the floor surface.
- Only Hoover ONEPWR batteries and chargers should be used with this machine.
- Only Hoover ONEPWR recommended tools and accessories should be used with this machine.
- Always remove the battery from the machine before carrying out any maintenance or if storing unused for a long period of time.

- Keep all openings clear and free from debris as this may affect the airflow/suction.
- Turn off all controls on the machine before disconnecting or connecting the battery.
- Always protect the charger power cord from heated surfaces or near open flames.
- Only use the machine indoors on dry surfaces and keep the area you're cleaning well lit.
- The power cord cannot be replaced. If the cord is damaged the charger should be scrapped.
- Do not use this charger to charge non-rechargeable batteries.
  This appliance is not intended for use by persons (including children) with reduced physical, sensory or mental capabilities, or lack of experience and knowledge, unless they have been given supervision or instruction concerning use of the appliance by a person responsible for their safety.
- Children should be supervised to ensure that they do not play with the appliance.
- Keep fingers, hair and loose clothing away from moving parts and openings whilst using the machine.
- Store the machine in a cool, dry area. Keep the machine away from rain and moisture.
- Take extra care when using the machine on the stairs.
- Use only Australian/New Zealand approved 10amp extension cords, non-approved extension cords may overheat. Care should be taken to arrange the extension cord as it can be a trip hazard.
- To prevent any damage being sustained, test on an inconspicuous area of the flooring first.
- Always make sure the separator and filter are fitted correctly before using your machine and only use the machine with the filter and separator in place.
- Always check the powered head and accessories are free from damage, dirt and debris before using.
- This machine does not stay upright without constant support. Between uses, lie flat on the floor in a suitable location so that it does not become a trip hazard or can be stepped on.

BATTERY SAFETY PRECAUTIONS

- Replace the battery with a Hoover ONEPWR battery only. Use of another battery may present a risk of fire or explosion.
- Do not attempt to disassemble the battery, remove any component projecting from the battery terminals and do not dispose of in a fire.
- The battery and charger have no user serviceable parts. Fire or injury may result.
- Prior to disposal, protect exposed terminals with heavy insulating tape to prevent shorting. The battery is to be disposed of safely at your local battery recycling centre.
- When the battery pack is not in use, keep it away from other metal objects that can make a connection from one terminal to another. Shorting the battery terminals together may cause burns or a fire.
- In case of battery leakages avoid any contact with the skin. If liquid comes into contact with the skin, wash immediately with soap and water, then neutralise with lemon juice or vinegar. If liquid gets into the eyes, flush with clean water for at least 10 minutes, then seek immediate medical attention.
- To reduce the risk of fire, personal injury, and product damage due to short circuit, never immerse the tool, battery pack, or charger in fluid or allow fluid to flow inside them. Corrosive or conductive fluids, such as seawater, certain industrial chemicals, and bleach or bleach-containing products, etc., can cause a short circuit.

Technical Specifications	F18OPSV22Z	F18OPSV23H	F18OPSV22J2	F18OPSV23I	F18OPSV22A2
Product Description	Hoover ONEPWR Emerge	Hoover ONEPWR Emerge Plus	Hoover ONEPWR Emerge Pet	Hoover ONEPWR Emerge Pet Plus	Hoover ONEPWR Emerge Complete
Console Model Number	BH53600ANZV	BH53641ANZV	BH53602ANZV	BH53603ANZV	BH53654ANZV
Product Weight (without battery pack)	2.8kg	2.8kg	3.09kg	3.09kg	3.09kg
Dust Cup Capacity	600ml	600ml	600ml	600ml	600ml
Runtime*	Up to 45 mins	Up to 45 mins	Up to 45 mins	Up to 90 mins**	Up to 90 mins**
Charge Time (per battery)	3 hours	3 hours	3 hours	3 hours	2 hours
Charger Model Number	BH05000ANZ	BH05000ANZ	BH05000ANZ	F18CHOP21K	BH35200ANZV
Battery(s) Included	1x 4.0Ah	1x 4.0Ah	1x 4.0Ah	2x 4.0Ah	2x 4.0Ah
Battery Model Number	BH29040ANZV	BH29040ANZV	BH29040ANZV	BH29040ANZV	BH29040ANZV
Battery Voltage	18V Li-Ion	18V Li-Ion	18V Li-Ion	18V Li-Ion	18V Li-Ion
Replacement Filter Part Number	FOPEMFT22N2	FOPEMFT22N2	FOPEMFT22N2	FOPEMFT22N2	FOPEMFT22N2

Compatible Battery Packs

MODEL	TYPE	RATED VOLTAGE	RATED CAPACITY	CELL NUMBER
F18BTOP21J4	Li-Ion	18V	4.0Ah	5
BH29040ANZ	Li-Ion	18V	4.0Ah	5
BH29040ANZV	Li-Ion	18V	4.0Ah	5

Subject to technical change without notice.

* Runtime is based on internal testing. Actual runtime will vary under specific conditions or when using different accessories.
** Runtime is based on two 4.0Ah battery packs.

Description of Symbols

Regulatory Compliance Mark | For Indoor Use Only | Read User Manual

DISTRIBUTED BY:

Techtronic Industries Australia Pty Ltd
31 Gilby Road, Mount Waverley, VIC 3149, Australia
Web Address: www.hoover.com.au
Customer Careline: 1300 698 130

Techtronic Industries N.Z. Limited
Unit C, 70 Business Parade South, East Tamaki, Auckland 2013, New Zealand
Web Address: www.hoover.co.nz
Customer Careline: 0800 126 688

MACHINE OVERVIEW

EMERGE
CORDLESS VACUUM

F180PSV22Z

EMERGE+
CORDLESS VACUUM

F180PSV23H

1 Carry Handle
2 Filter (hidden)
3 Dirt Cup Release Button
4 Dirt Cup
5 Dirt Release Button (hidden)
6 Handheld Crevice Tool (hidden)
7 Power ON/OFF
8 Reduce Suction
9 Increase Suction
10 Battery Level Indicator Light
11 Reach Wand
12 Reach Wand Crevice Tool (hidden)
13 Floorhead with LED Lights
14 Brushbar
15 Battery Dock
16 1x ONEPWR 4.0Ah Battery
17 ONEPWR Charger
18 2-in-1 Dusting Brush/Crevice Tool
19 Upholstery Tool
20 Wall Mount
21 Flexi Crevice Tool[1]

16

17

18

19

20

21

[1]Only include with model F180PSV23H.
Contents vary dependant on model purchased. Images are illustrative only and not to scale.

EMERGE PET
CORDLESS VACUUM
F18OPSV22J2

EMERGE PET+
CORDLESS VACUUM
F18OPSV23I

1 Carry Handle
2 Filter (hidden)
3 Dirt Cup Release Button
4 Dirt Cup
5 Dirt Release Button (hidden)
6 Handheld Crevice Tool (hidden)
7 Power ON/OFF
8 Reduce Suction
9 Increase Suction
10 Battery Level Indicator Light

EMERGE COMPLETE
CORDLESS VACUUM
F18OPSV22A2

11 Reach Wand
12 Reach Wand Crevice Tool (hidden)
13 All-Terrain Floorhead with LED Lights
14 Brushbar and Brushroll
15 Battery Dock
16 1x ONEPWR 4.0Ah Battery[1]
17 ONEPWR Charger[1]
18 2-in-1 Dusting Brush/Crevice Tool
19 Motorised Pet Tool
20 Wall Mount[2]
21 Powered Extension Hose
22 ONEPWR Dual Bay Charger with 2x ONEPWR 4.0Ah Batteries[3]
23 Upholstery Tool[4]
24 ONEPWR Tower Charging Stand with 2x ONEPWR 4.0Ah Batteries[4]

[1]Only include with model F18OPSV22J2.
[2]Only include with models F18OPSV22J2 and F18OPSV23I.
[3]Only include with model F18OPSV23I.
[4]Only include with model F18OPSV22A2.
Contents vary dependant on model purchased. Images are illustrative only and not to scale.

ASSEMBLING THE VACUUM

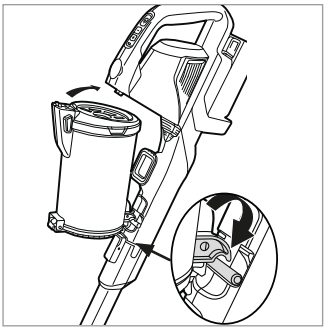

Fit the dirt cup onto the hooks, then rock it up into the handheld so it secures into place.

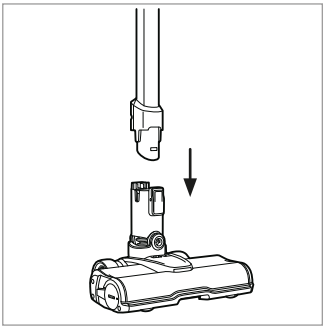

Push the reach wand down onto the floorhead until it clicks into place.

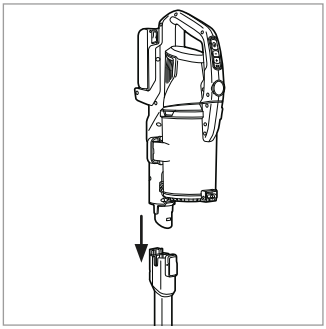

Push the handheld down onto the reach wand until it clicks into place.

NOTE: The tool caddy attaches onto the reach wand. Accessories can be stored by sliding them onto the top and bottom of the tool caddy.

ASSEMBLING THE ONEPWR TOWER CHARGING STAND (MODEL F180PSV22A2)

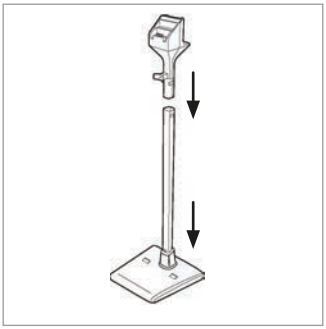

Lay the base on flat ground. Insert end of pole (with single hole) into base until it clicks into place. Insert charger head into top of pole until it clicks into place.

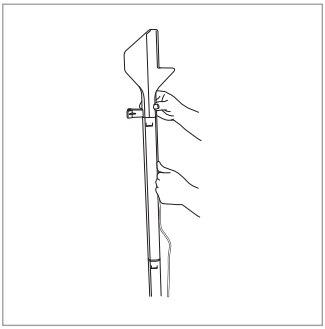

Attach the power cord to charger head and press the power cord into the hidden channel. Continue pressing the power cord into channel down the back of the pole. Clip tool accessory onto pole.

ATTACHING THE WALL MOUNT (MODELS: F180PSV22Z, F180PSV23H, F180PSV22J2 & F180PSV23I)

IMPORTANT: The wall mount is not designed to hold the full weight of the vacuum. The floorhead should be positioned flat on the surface of the floor to support the weight of the vacuum while the wall mount positions the vacuum in the upright position.

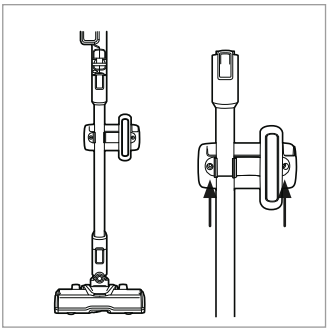

Choose the desired location, then place the wall mount on the wall. Ensure that the mount height allows the floorhead to be positioned flat on the floor when mounted. Mark the wall anchor locations. Install the anchors and screw the wall mount to the wall.

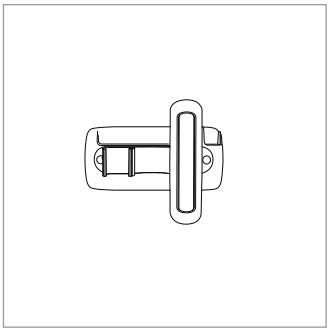

Store the vacuum by firmly pressing the product into the wall mount to secure.

Accessories can be stored by sliding them onto the top and bottom of the wall mount.

NOTE: Vacuum can be locked into an upright position, but is not meant to be left standing unattended. While using the vacuum in between uses or when carrying out any maintenance always lie the vacuum flat on the floor, in a suitable location so it does not become a trip hazard or can be stepped on.

CHARGING THE BATTERY

THIS MACHINE IS ONLY TO BE USED WITH HOOVER ONEPWR BATTERIES AND CHARGER. PLEASE READ THE BATTERY AND CHARGER USER GUIDES BEFORE USE.

NOTE: Before first use, ensure the battery is fully charged. Failure to fully charge the battery before first use may result in poor battery performance. The life expectancy of the battery will vary depending on the usage of the machine.

ONEPWR CHARGER (MODELS: F180PSV22Z, F180PSV23H & F180PSV22J2)

Plug in the charger. Attach the battery pack to the charger by aligning the ribs on the battery pack to the grooves in the charger.

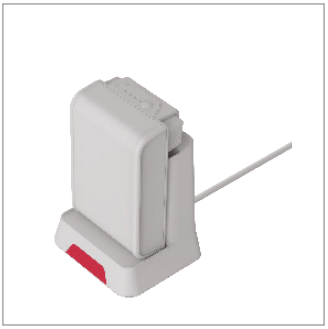

The charger light will flash white to show when the battery is charging. The light on the charger will stop flashing and go off when the battery is fully charged.

Once fully charged, slide the battery off the charger to remove.

To check the battery charge level press the battery symbol.

ONEPWR DUAL BAY CHARGER (MODEL: F180PSV23I)

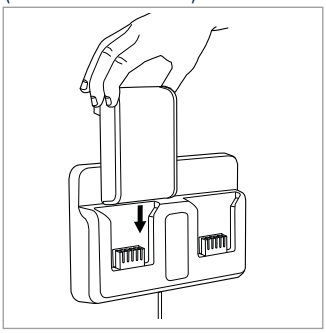

Plug in the charger. Attach the battery pack(s) to the charger. The charger light will flash white to show when the battery is charging. The light on the charger will stop flashing and remain on when the battery is fully charged.

ONEPWR TOWER CHARGING STAND (MODEL: F180PSV22A2)

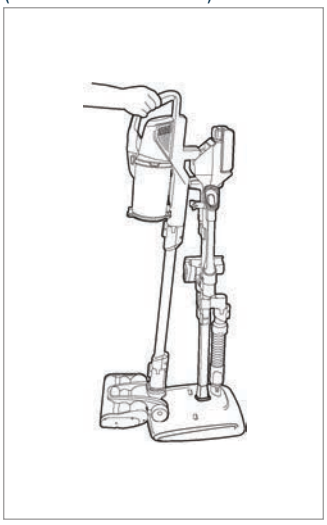

Plug in the charger and place the vacuum onto the charging stand, as shown. To charge the spare battery, slide the battery pack into the charger located at the rear of the charger head. The charger light will flash white to show when the battery is charging. The light on the charger will stop flashing and remain on when the battery is fully charged.

NOTE: The battery inserted into the vacuum will charge first. Once fully charged, the spare battery inserted at the rear of the charging head will begin to charge.

OPERATION

WARNING: The brushbar in the floorhead constantly rotates when activated. Never use the floorhead on one spot for an extended period of time as the brushbar may damage the surface. To prevent any damage being sustained, test on an inconspicuous area of the flooring/surface first.

CAUTION: Always take extra care when using the vacuum on the stairs.

Slide the battery into the machine until it clicks into place.

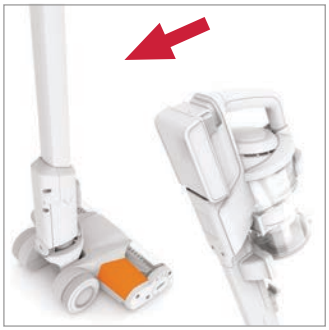

Place your foot on the floorhead. Pull the handle backwards to recline.

To remove the battery press both the buttons to release.

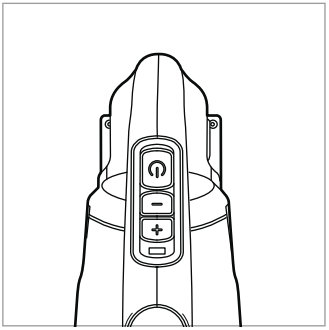

- ON/OFF power button.
- Unit turns on in Default mode.
- To increase runtime for hard floors and everyday messes.
- To increase suction for more embedded messes.
- Battery LED is illuminated WHITE when on and RED when battery is low.

NOTE: Pressing the - or + will increase or decrease the power level from where it is currently running.

During use, press the battery symbol on the battery. The lights will illuminate indicating how much charge is remaining.

CAUTION: Store the vacuum safely after use to prevent tripping accidents.

CAUTION: Not to be used for grooming a pet.

NOTE: When less than 20% charge is remaining the low battery indicator will flash red indicating the battery is running low and charging is required.

CAUTION: If the brushbar in the floorhead has been obstructed, the brushbar motor protection sensor may activate. The brushbar will stop and the machine may switch off. To reset, switch the machine off and remove the battery. Remove the floorhead from the reach wand/ handheld and clear any obstruction. Wait 1 minute before refitting the floorhead. Install the battery and switch the machine on.

HANDHELD MODE

WARNING: To reduce the risk of personal injury, always turn power switch off and remove battery before connecting or disconnecting accessories.

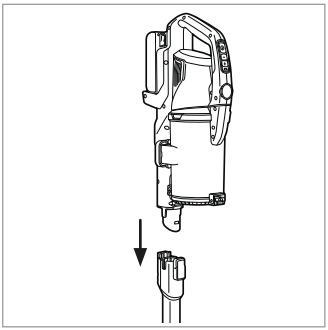

Press the release button on reach wand and pull to separate.

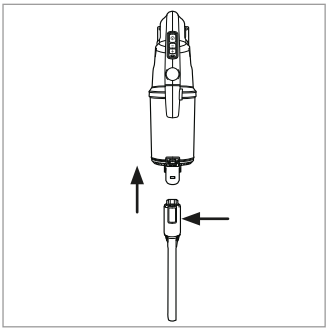

Push the chosen accessory into the handheld until it clicks into place.

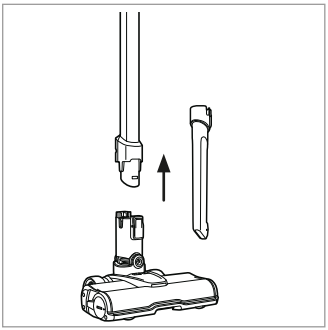

Accessories can also be attached onto the reach wand for cleaning up high. Disconnect the floorhead and push the accessory into the reach wand until it clicks into place.

USING THE ACCESSORIES

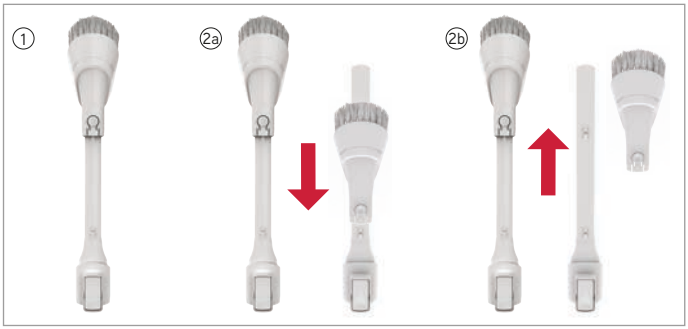

2-in-1 Dusting Brush/Crevice Tool
1. Soft bristled dusting brush for delicate surfaces and skirting boards.
2a. For edge cleaning press the button and push the dusting brush down.
2b. For tight and hard to reach areas press the button and pull the dusting brush up to remove it.

Motorised Pet Tool
While in use, the mini motorised base plate can be rotated so it can be used flat or horizontally for all angle cleaning.

NOTE: Motorised pet tool included with models F180PSV22J2, F180PSV23I & F180PSV22A2 only.

USING THE ACCESSORIES

WARNING: To reduce the risk of personal injury, always turn power switch off and remove battery before connecting or disconnecting accessories.

Powered Extension Hose
Extends to reach confined spaces. Powered for use with the motorised pet tool and floorhead. Can also be used with the upholstery and 2-in-1 dusting brush/crevice tool.

NOTE: Powered extension hose included with model F18OPSV22J2, F18OPSV23I & F18OPSV22A2 only.

Upholstery Tool
Ideal for cleaning surfaces such as sofas, chairs, mattresses, and cushions. For more delicate areas, the brush attachment can be removed by unclipping the attachment from the tool.

NOTE: Upholstery tool included with model F18OPSV22Z, F18OPSV23H & F18OPSV22A2 only.

Flexi Crevice Tool
For cleaning those hard to reach areas. Extends and bends for cleaning in awkward gaps.

NOTE: Flexi crevice tool included with model F18OPSV23H only.

NOTE: All of the accessories, including the 2-in-1 tool, upholstery tool, flexi crevice tool, motorised pet tool and floorhead, can be attached directly onto the handheld, reach wand or powered hose.

The powered hose, crevice tool, flexi crevice tool and dusting brush can be used for cleaning in hard to reach places and at different heights for above floor cleaning.

To remove the tools, press the button on the tool and pull to release.

CLEANING AND MAINTENANCE

WARNING: To reduce the risk of personal injury, always turn power switch off and remove battery before cleaning or servicing.

IMPORTANT: Avoid using solvents when cleaning plastic parts. Most plastics are susceptible to damage from various types of commercial solvents and may be damaged by their use. Use a clean cloth to remove dirt, dust, oil, grease, etc.

EMPTYING THE DIRT CUP

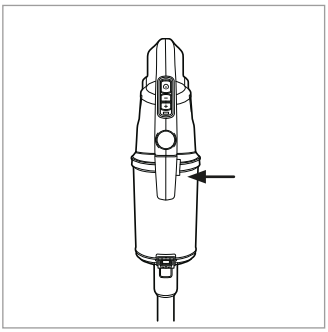

Press button to release the dirt cup.

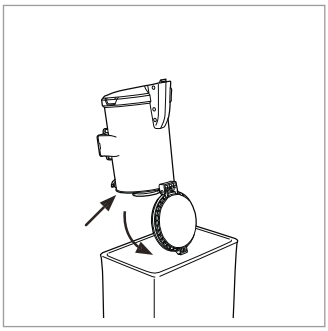

Hold the dirt cup over a bin and press the dirt cup release button to empty. Close the dirt cup, then replace it by rocking it back into place.

NOTE: For best cleaning results, empty the dust cup after each use.

CLEANING THE SEPARATOR

Lift the dirt cup cover to access the filter. Lift the filter and separator from the dirt cup.

Tap the separator over a bin to remove dirt and debris and wipe over the metal shroud with a dry cloth.

CLEANING THE FILTER

IMPORTANT: The filter should be tapped over a bin every 4-6 uses, to remove dirt and debris, and replaced every 6-9 months, depending upon use. The filter should be washed every 3 months, or when required. Allow the filter to completely dry before reinstalling.

Pull the tab on the filter to remove from the separator.

Tap the filter against the bin to remove any dirt and debris.

Wash the filter under running water (40°C max). Leave for at least 24hrs or until fully dry before replacing.

Refit the separator making sure that the tabs on the separator fits into the grooves on the dirt cup. Then refit the dirt cup cover.

CAUTION: Ensure that the filter, dirt cup lid and separator are refitted before use.

IMPORTANT: Don't over fill the dust cup to avoid blocking the air flow through the vacuum cleaner. Do not exceed the MAX line indicated on the side of the dust cup.

NOTE: The replacement filter part number is FOPEMFT22N2.

REMOVING AND CLEANING THE BRUSHBAR (MODELS: F180PSV22Z & F180PSV23H)

NOTE: If the brushbar in the floorhead has been obstructed, the brushbar motor protection sensor may activate. The brushbar will stop and the machine may switch off. To reset, switch the machine off and remove the battery. Remove the floorhead from the reach wand/handheld and clear any obstruction. Wait 1 minute before refitting the floorhead. Install the battery and switch the machine on.

WARNING: To reduce the risk of personal injury, always turn power switch off and remove battery before cleaning or servicing.

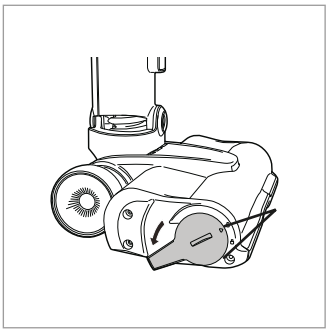

Remove the floorhead from reach wand. Using your fingers or a coin, push and turn the brushbar lock anticlockwise to release the brushbar.

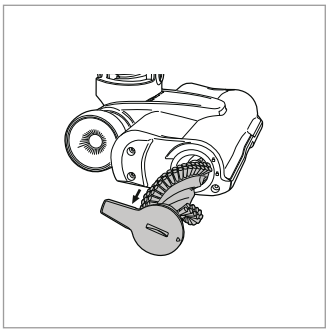

Pull the brushbar out of the floorhead with pull tab.

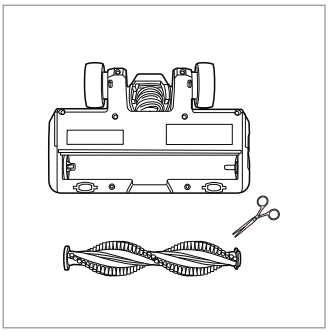

To remove any threads or hair, cut along the groove of the brushbar.

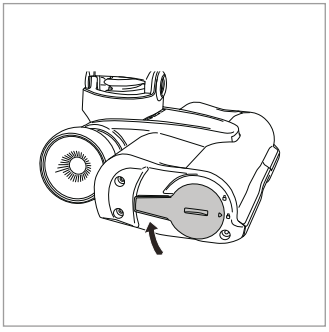

Refit the brushbar into the housing and turn the brushbar lock clockwise to lock.

IMPORTANT: For best performance, regularly remove any threads or hair from around the brushbar.

REMOVING AND CLEANING THE BRUSHBAR
(MODELS: F180PSV22J2, F180PSV23I & F180PSV22A2)

NOTE: If the brushbar or brushroll in the floorhead has been obstructed, the motor protection sensor may activate. The brushes will stop and the machine may switch off. To reset, switch the machine off and remove the battery. Remove the floorhead from the reach wand/handheld and clear any obstruction. Wait 1 minute before refitting the floorhead. Install the battery and switch the machine on.

WARNING: To reduce the risk of personal injury, always turn power switch off and remove battery before cleaning or servicing.

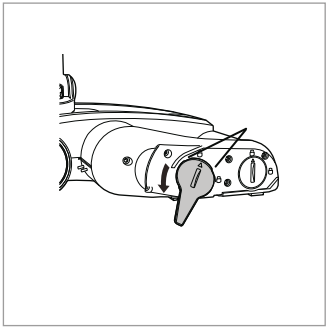

Remove the floorhead from reach wand. Using your fingers or a coin, push and turn the brushbar lock anticlockwise to release the brushbar.

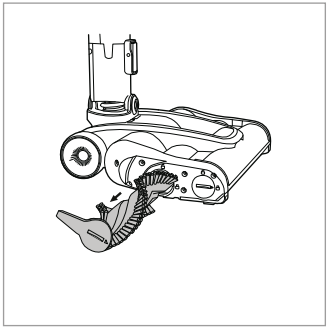

Pull the brushbar out of the floorhead with pull tab.

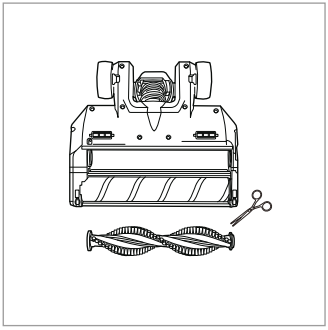

To remove any threads or hair, cut along the groove of the brushbar.

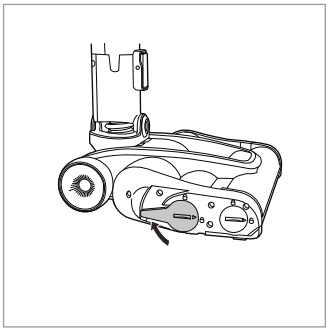

Refit the brushbar into the housing and turn the brushbar lock clockwise to lock.

IMPORTANT: For best performance, regularly remove any threads or hair from around the brushbar.

REMOVING AND CLEANING THE BRUSHROLL
(MODELS: F180PSV22J2, F180PSV23I & F180PSV22A2)

NOTE: If the brushbar or brushroll in the floorhead has been obstructed, the motor protection sensor may activate. The brushes will stop and the machine may switch off. To reset, switch the machine off and remove the battery. Remove the floorhead from the reach wand/handheld and clear any obstruction. Wait 1 minute before refitting the floorhead. Install the battery and switch the machine on.

WARNING: To reduce the risk of personal injury, always turn power switch off and remove battery before cleaning or servicing.

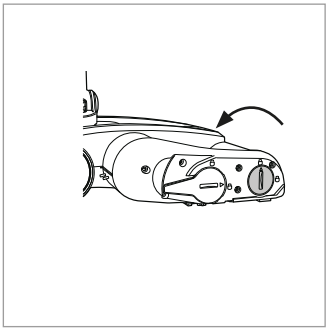

Using a coin, push and turn the brushroll lock anticlockwise to unlock the brushroll.

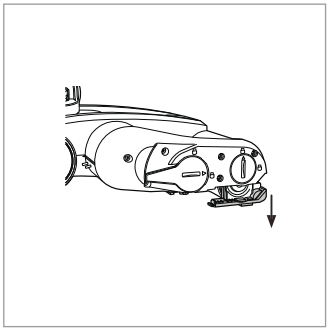

Lift and rotate the brushroll away from the floorhead assembly.

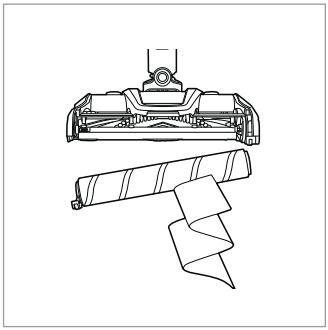

Clear debris from the brushroll with a dry cloth. Clear any dirt/debris from the end caps of the powered nozzle.

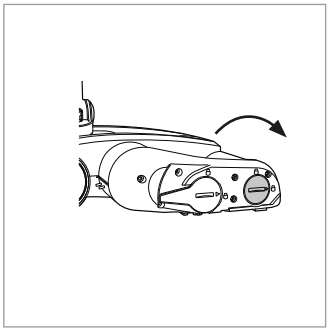

Refit the brushroll into the housing and turn the brushroll lock clockwise to lock.

IMPORTANT: For best performance, regularly remove any threads or hair from around the brushroll.

REMOVING AND CLEANING THE MOTORISED PET TOOL BRUSHBAR
(MODELS: F180PSV22J2, F180PSV23I & F180PSV22A2)

NOTE: If the brushbar in the motorised pet tool has been obstructed, the brushbar motor protection sensor may activate. The brushbar will stop and the machine may switch off. To reset, switch the machine off and remove the battery. Remove the tool and clear any obstruction. Wait 1 minute before refitting the tool. Install the battery and switch the machine on.

WARNING: To reduce the risk of personal injury, always turn power switch off and remove battery before cleaning or servicing.

Using a coin, turn the brushbar lock anticlockwise to release the brushbar.

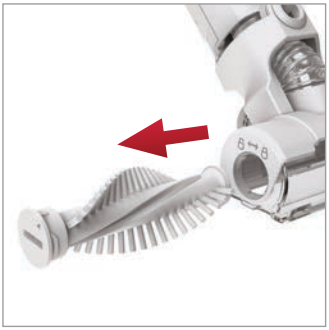

Pull the brushbar out from the brushbar housing.

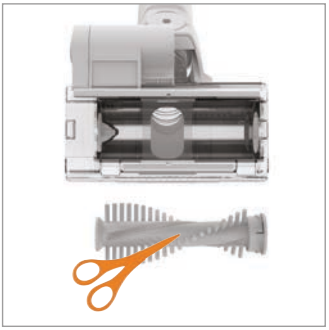

To remove any threads or hair slide the blade of a pair of scissors into the groove on the brushbar and cut along the groove. Clear any dirt/debris inside the housing of the tool.

Check the inlet for any blockages and use a blunt object to remove the blockage.

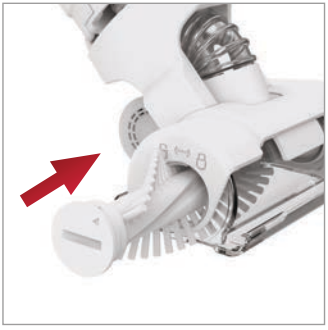

Refit the brushbar and turn the brushbar lock clockwise to lock.

CHECKING FOR BLOCKAGES

WARNING: To reduce the risk of personal injury, always turn power switch off and remove battery before cleaning or servicing.

Remove the dirt cup and reach wand. Check and clear any dirt and debris from the dirt cup and handheld inlet.

Press the dirt cup release button and remove the dirt cup. Check and clear any dirt and debris from behind the dirt cup flap.

Check the powered floorhead for any blockages and use a blunt object to remove the blockage.

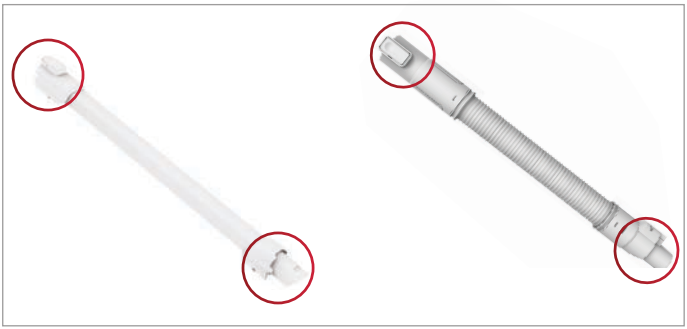

To test for a blockage in the reach wand or powered hose, drop a small ball of paper into the wand/hose. The paper will drop through if the wand/hose is clear. Use a broom handle or similar blunt object to remove any blockage.

NOTE: Powered extension hose included with models F180PSV22J2, F180PSV23I & F180PSV22A2 only.

WARNING: To reduce the risk of personal injury, always turn power switch off and remove battery before cleaning or servicing.

There is an accessory missing

- Check the contents on the box to make sure the part is definitely included with your machine.

Why does the machine have no power?

- The battery is not fitted correctly. **See Operation section.**
- The battery has no charge. **See Charging the Battery section.**
- The motor thermostat may have tripped. Empty the dirt container and check for blockages. Clean the filters and allow the machine to cool for approximately 1 hour. If you have washed the filters, wait 24 hours to fully dry before placing back on the machine. **See Cleaning the Filter and Separator section.**
- The brushbar motor sensor in the floorhead or motorised pet tool has been activated. To reset, switch the machine off and remove the battery. Remove the floorhead/tool from the reach wand/handheld and clear any obstruction. Wait 1 minute before refitting the floorhead /tool. and reactivating the machine. Install the battery and switch the machine on.

Why won't the machine pick up?

- The dirt cup may not be fitted correctly. **See Assembly section.**
- The dirt cup may be full or blocked. Check the dirt cup and handheld inlet for blockages.
- The filters may be clogged or need replacing. **See Cleaning the Filter and Separator section.**
- There may be a blockage. **See Checking for Blockages section.**
- The floorhead may be blocked. **See Removing and Cleaning the Brushbar section.**
- The machine, floorhead and reach wand may not be correctly fitted. **See Assembly section.**

Why is there a red light?

- Battery charge is running low (<20%). **See Charging the Battery section.**

Why won't the brushbar in the floorhead or motorised pet tool turn?

- The tool/brushbar/brushroll may be obstructed. **See Removing and Cleaning the Brushbar section and Removing and Cleaning the Motorised Pet Tool Brushbar section.**
- The machine, floorhead, reach wand and motorised pet tool may not be correctly fitted. **See Assembly section and Getting Started section.**

HOOVER.COM.AU
HOOVER.CO.NZ